November 06, 2019

Diamond Report:	**981663**
Shape & Cutting Style	**Radiant**
Measurements	4.75 x 4.10 x 3.40 mm

Grading Results - IGL 4C's

Carat Weight	**0.53 Ct.**
Color Grade	**D**
Clarity Grade	**VVS2**

Additional Grading Characteristics

Finish	
Polish	Excellent
Symmetry	Excellent
Girdle	Medium
Fluorescence	None

Comments

"EXCELLENT IDEAL SHAPE" - The quality of the shape of diamond achieves Excellence in symmetry of proportions, thu obtaining the optimal dispersion of light and brilliance.
Clarity Enhanced.

Laser Script	**IGL G981663**
Insurance Replacement Value	**1,793.00 $**

100% NATURAL DIAMOND

Conflict Free Diamond

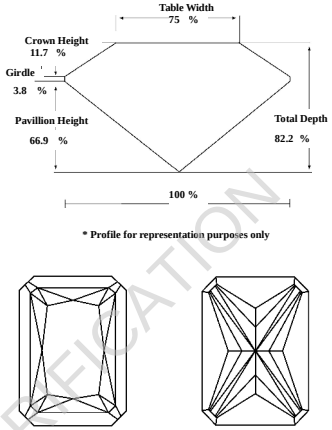

ONLINE VERIFICATION